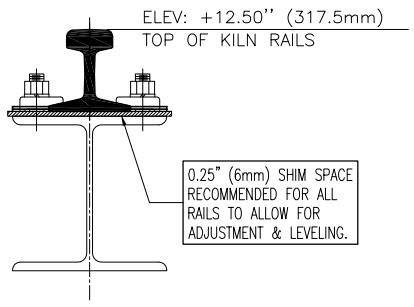

SHIM DETAIL
NOT TO SCALE

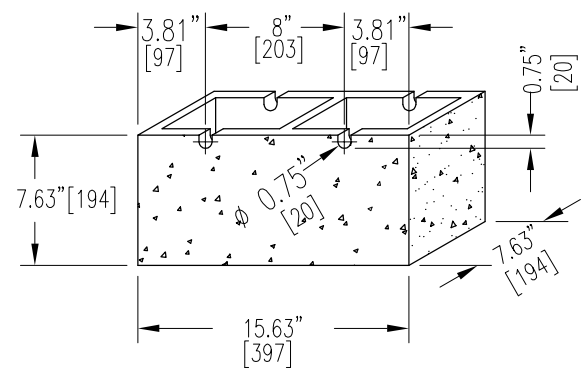

BLOCK DETAIL
NOT TO SCALE

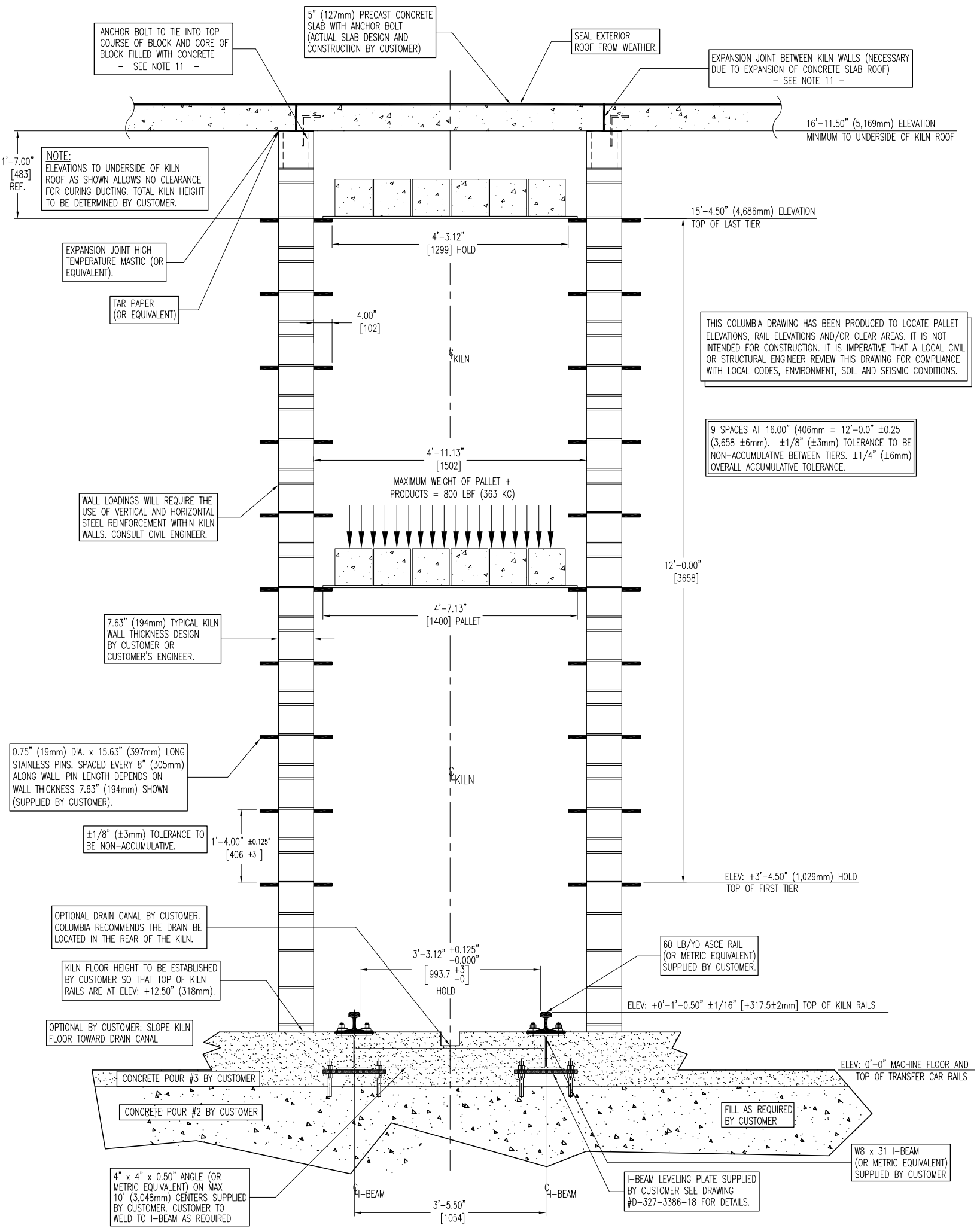

DRAWING AS SHOWN IS FOR 10–TIERS @ 16" (406mm) SPACING.
PALLET SIZE: 27.56" x 55.13" x .50" (700 x 1,400 x 13mm)

NOTES

1. CUSTOMER SHALL SUPPLY ALL INSTALLATION LABOR AND MATERIALS, UNLESS WHERE NOTED OTHERWISE OR INCLUDED IN THE PROFORMA. CUSTOMER SHALL BE RESPONSIBLE FOR DESIGN AND CONSTRUCTION OF ALL FOOTINGS, WALLS & FLOORING. CONSULT LOCAL ARCHITECT, CIVIL ENGINEER OR BUILDING CODE FOR SPECIFIC DETAILS.
2. SIZES OF I–BEAM SUPPORTS ARE RECOMMENDED ONLY. ACTUAL SIZE REQUIRED IS TO BE DETERMINED BY CUSTOMER OR LOCAL STRUCTURAL ENGINEER.
3. RAIL GAUGE MUST BE HELD +1/8", –0" (+3mm, –0mm).
4. SAFETY INTERLOCKS AND GUARDING IN COLUMBIA PROVIDED EQUIPMENT MUST NOT BE REMOVED OR BYPASSED. MULTIPLE PINCH POINTS WILL BE PRESENT IN KILNS.
5. RAILS TO BE HELD LEVEL NOT TO EXCEED 0.5% MAXIMUM GRADE (1/16" RISE OVER 12" RUN 5mm RISE OVER 1m RUN). TOP OF RAIL ELEVATION VARIATION OVER TOTAL RAIL RUN LENGTH NOT TO EXCEED ±1.00" (±25mm) FROM TOP OF TRANSFER CAR RAILS. NOT TO EXCEED 0.5% MAXIMUM GRADE
6. KILN RAILS MUST BE INSTALLED PARALLEL TO KILN WALLS. KILNS MUST BE CHECKED BY CUSTOMER TO ENSURE ALL KILN WALLS ARE HELD PARALLEL TO EACH OTHER AS WELL AS HELD PERPENDICULAR TO THE TRANSFER CAR RAILS. COLUMBIA CANNOT BE HELD RESPONSIBLE FOR THE OPERATION OF THE SYSTEM OR DAMAGE TO THE SYSTEM IF THESE SPECIFICATIONS AS WELL AS THE SPECIFICATIONS OF THE ENTIRE RAIL INSTALLATION PACKAGE ARE NOT FOLLOWED.
7. RAIL PAIRS MUST BE COPLANAR BY ±1/16" (±2mm) THROUGH ENTIRE LENGTH RUN.
8. USE OF NEW RAIL IS REQUIRED THROUGHOUT THE SYSTEM IN ORDER TO HELP MAINTAIN ELEVATION OF RAILS AND RAIL STRAIGHTNESS.
9. REFER TO D–327–3386–18 FOR TYPICAL RAIL HOLD–DOWN DETAIL.
10. ELEVATION TO TOP OF RAILS AND FIRST TIER (SHELF) MUST BE HELD BY ±1/16" (±2mm) THROUGH ENTIRE KILN LENGTH RUN.
11. ROOF JOINT DETAILS ARE SUGGESTIONS ONLY! DESIGN MUST MEET LOCAL CODE REQUIREMENTS. CUSTOMER MUST CONSULT LOCAL CIVIL ENGINEER FOR ACTUAL CONSTRUCTION DETAILS.

REV.	ZONE(S)	CHANGE / D.C.N.	DATE	BY	M/F
-	-	-			

THIS DRAWING WITH ITS PRINCIPLES OF DESIGN CONTAINS PROPRIETARY AND CONFIDENTIAL INFORMATION OF COLUMBIA MACHINE. NOT TO BE USED, COPIED OR DISCLOSED WITHOUT WRITTEN PERMISSION. PROTECTED UNDER U.S. AND FOREIGN COPYRIGHT LAW. ALL RIGHTS RESERVED.

Columbia MACHINE, INC.
VANCOUVER, WASHINGTON
SALES ENGINEERING, CONCRETE PRODUCT DIVISION

THIS PRINT IS FOR REFERENCE ONLY

TITLE: ELEVATION VIEW AT FRONT OF KILN FOR 60LB RAIL (32K HYDRAULIC PTS)
– –

PRELIMINARY DRAWING: ☒
NOTE: ALL DIMENSIONS ARE PRELIMINARY AND SUBJECT TO FINAL DESIGN CHANGES BY COLUMBIA MACHINE INC. AS WELL AS APPROVAL OF THE DRAWING BY CUSTOMER.

S.O.# –
DWG. FOR APPROVAL: ☐
DWG. FOR CONSTRUCTION: ☐

DATE: JUNE 12, 2009	DRAWN BY: I.S.		
SCALE: DO NOT SCALE	CAD FILE: 327–3386–16		
D– –	REV.: 0	SHT 1 OF 1	